PANELEX

COLUMN COVER

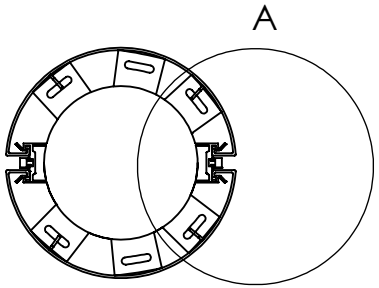

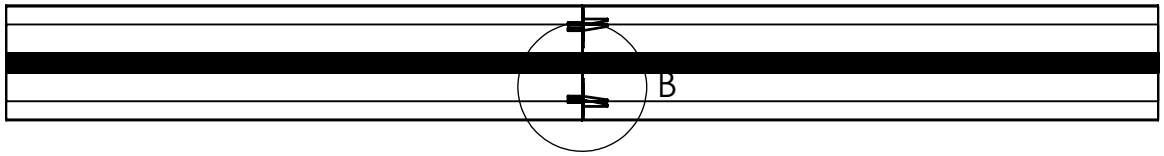

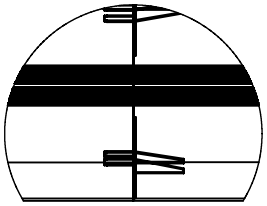

DETAIL B
SCALE 1 : 10

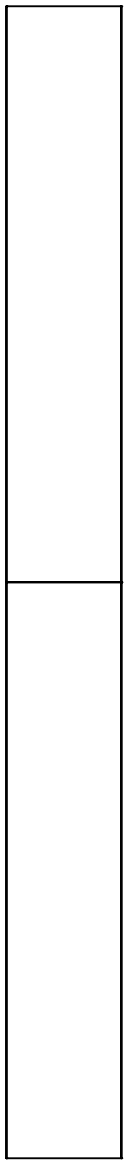

DETAIL A
SCALE 1 : 3

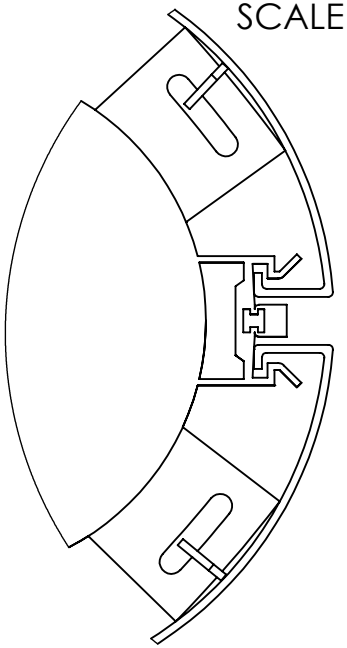

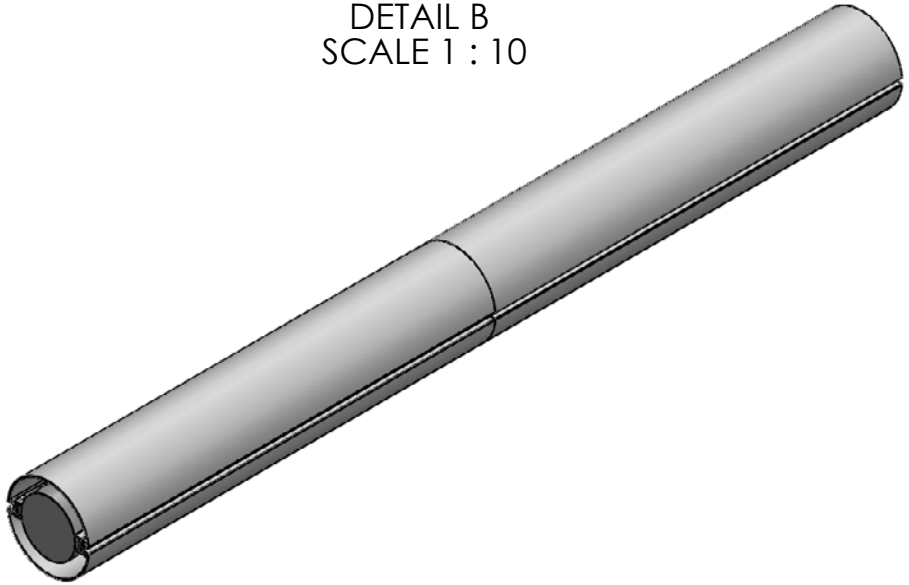

		DIMENSIONS ARE IN INCHES TOLERANCES: FRACTIONAL ± ANGULAR: MACH ± BEND ± TWO PLACE DECIMAL ± THREE PLACE DECIMAL ±		NAME	DATE
			DRAWN	R.R	11/05/14
			CHECKED		
			ENG APPR.		
			MFG APPR.		
		MATERIAL: ALUMINUM/STEEL/COMPOSITE	Q.A.		
			COMMENTS:		
NEXT ASSY	USED ON	FINISH : POST PAINTED : COLOR AS PER CLIENT REQUEST			
APPLICATION		DO NOT SCALE DRAWING			

PROPRIETARY AND CONFIDENTIAL

THE INFORMATION CONTAINED IN THIS DRAWING IS THE SOLE PROPERTY OF PANELEX INDUSTRIES LD. ANY REPRODUCTION IN PART OR AS A WHOLE WITHOUT THE WRITTEN PERMISSION OF PANELEX INDUSTRIES LTD. IS PROHIBITED.

PANELEX INDUSTRIES

COLUMN COVER

SIZE	DWG. NO. COLUMN COVER	REV.
A		
SCALE:1:50	WEIGHT:	SHEET 1 OF 1